CONFIDENTIAL
The reproduction, distribution and utilization of this document as well as the communication of its contents to others without express authorization is prohibited. Offenders will be held liable for the payment of damages. All rights reserved in the event of the grant of a patent, utility model or design.

NOTES:

1. CONTACT DEUBLIN OR VISIT WWW.DEUBLIN.COM FOR INSTRUCTION MANUAL: 040-550
2. PLUG INSTALLED HAND TIGHT FROM FACTORY. IF PORT IS NOT UTILIZED, TIGHTEN BEFORE USE.
3. BALL BEARINGS GREASED WITH HIGH TEMPERATURE GREASE
4. SEALING OF LOOSELY ENCLOSED ADAPTERS ACCORDING INSTRUCTION 040-731
5. RELUBRICATION OF BALL BEARINGS ACCORDING 040-723 RELUBRICATION INSTRUCTION
6. GASKET THICKNESS.

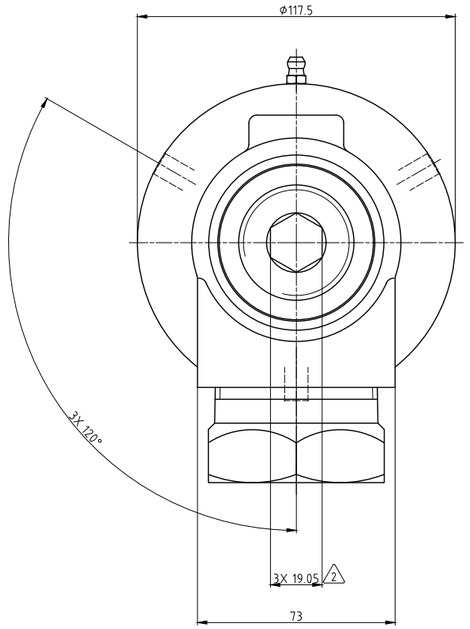

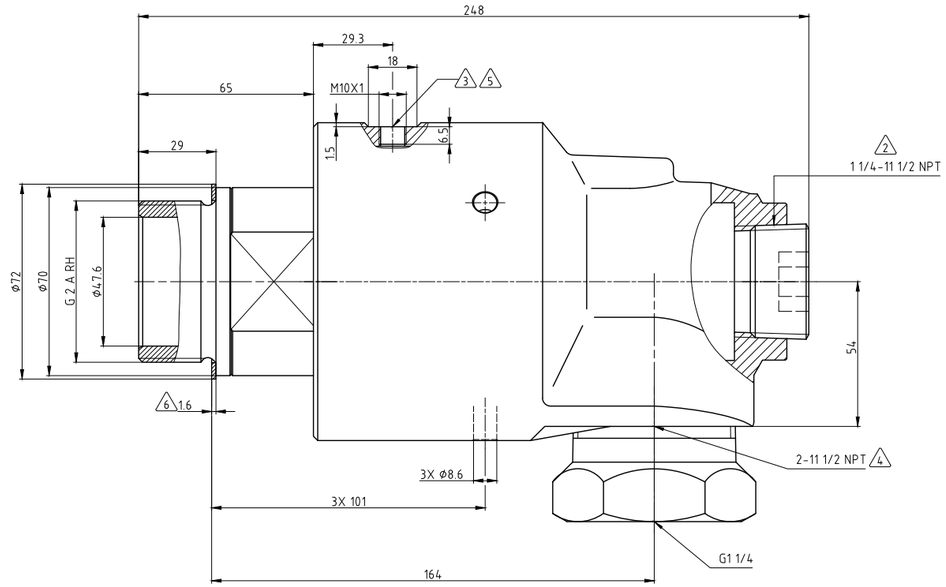

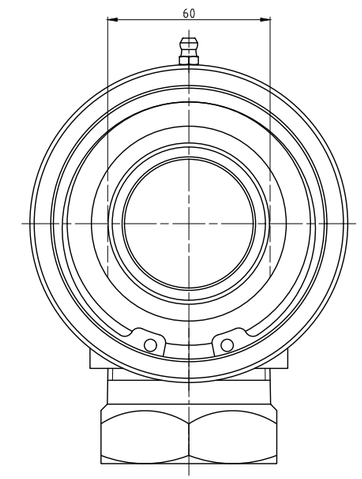

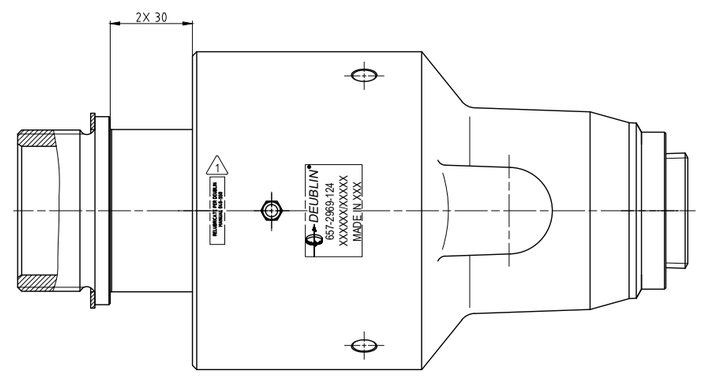

OPERATING DATA	
MEDIA	WATER
PRESSURE MAX.	20 bar
PRESSURE MIN AT 160°C*	5.2 bar
PRESSURE MIN AT 121°C*	1.0 bar
SPEED MAX.	750 min^{-1}
TEMPERATURE MAX.	160 °C
DRY RUN (WITHOUT ANY MEDIA)	NO
RECOMMENDED FILTRATION	60 micron

** - operating below these pressures may cause steam/water hammer in system*

DEUBLIN
HOERBIGER Rotary Solutions

PROJECTION:

	DATE	NAME
DRN.	07.12.2022	MSk
ENGR.	07.12.2022	RMk
APPD.		

UNLESS SPECIFICALLY TOLERANCED, ALL DIMENSIONS ARE CONSIDERED REFERENCE

ISSUE	MODIFICATION	ECO	DATE	SIGN

SCALE: 1:1
MATERIAL: INTERFACE CONTROL DRAWING
TITLE: DEUBLIN ROTATING UNION
DEUBLIN Drehdurchführung
NO. 657-2969-124
SHEET A2